Description	Symbol	Unit	MKD112D-027		
Cooling mode – Motor overtemperature			Natural 60K	Natural 100K	Surface 60K /100K
Electric parameters					
Characteristic motor speed	n_K	min^{-1}	3000		
Continous torque at standstill	M_{dN}	Nm	48,0	57,0	72,0
Continous current at standstill	I_{dN}	A	31,6	40,2	47,4
Peak current	I_{max}	A	142,2		
Torque constant at 20°C [1])	K_m	Nm/A	1,7		
Voltage constant at 20°C	$K_{E(eff)}$	$V/1000min^{-1}$	154,5		
Winding resistance at 20°C	R_{12}	Ω	0,35		
Winding inductace	L_{12}	mH	5,65		
Number of pole pairs	p		4		
Rated data [2])					
Rated speed	n_N	min^{-1}	2000	2000	2000
Rated torque	M_N	Nm	27,3	41,5	59,2
Rated current	I_N	A	12,7	20,7	27,6
Rated power	P_N	kW	6,9	11,3	15,2
Rated voltage	U_N	V	319	331	344
Rated frequency	f_N	Hz	133	133	133
Mechanical parameters					
Rotor inertia	J_M	kgm^2	350,0 x 10^{-4}		
Theoretical maximum torque	M_{max}	Nm	187		
Minimum strand cross-sectíon [4])	S	mm^2	2,5	4	6
Thermal time constant	T_{th}	min	90	90	40
Maximum speed	n_{max}	min^{-1}	3000		
Motor mass [3]) [5])	m	kg	56,0		
Perm. storage and transport temp.	T_L	°C	-20 to +80		
Permissible ambient temperature [6])	T_{um}	°C	0 to 40		
Max. setup height [6])	h	m	1000 above NN		
Protection category [7])			IP65		
Insulation class (according to DIN VDE 0530 Part 1)			F		
Housing coat			Prime coat black in a/wRAL 9005		

[1]) Km is to be used for calculations with crest values (I_{dN}, I_{max}). For calculations with root-mean-square values (rated data), the torque constant K_m must be multiplied by a factor of $\sqrt{2}$.
[2]) Values determined according to EN 60034-1. Current and voltage specified as root-mean-square values.
[3]) Use the declared value in bracket for motors holding brake.
[4]) Applicable to REXROTH INDRAMAT cables. Rated according to VDE0298-4 (1992) and installation type B2 according to EN 60204-1 (1993) at an ambient temperature of 40 °C.
[5]) Without blower unit.
[6]) If the limits specified are exceeded, the performance data must be reduced if necessary. For reduction factors, refer to the chapter entitled “Environmental Conditions”.
[7]) Provided the power and encoder cables are mounted properly

e-Servo

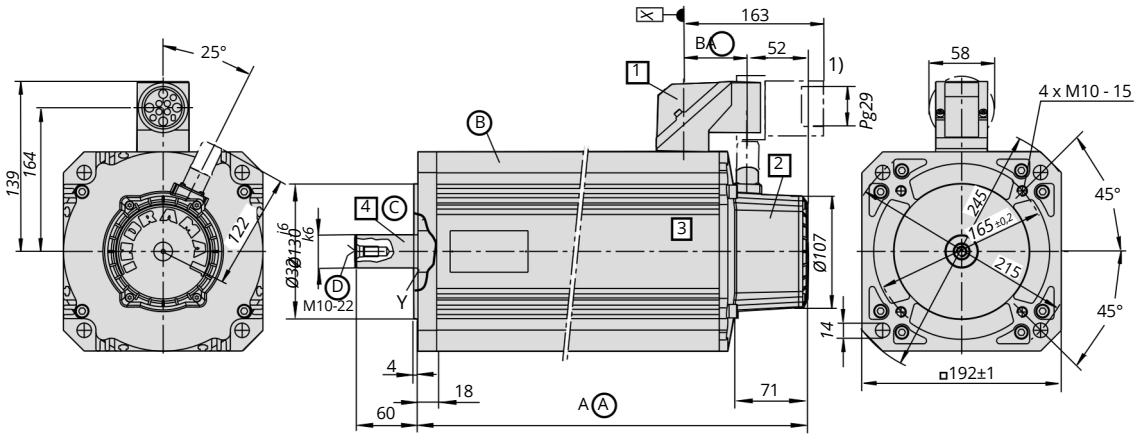

Detail Y:

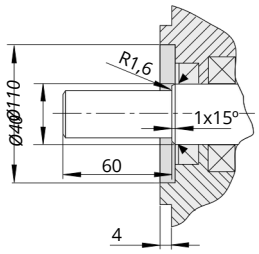

1) connector not included in delivery

Ⓐ Dimensions

Motor	Dim. A	Dim. B
MKD112A	309	67
MKD112B	375	67
MKD112C	458	96
MKD112D	526	96
Dim. A: motor length Dim. B: power connection		

Ⓑ Motor as per DIN EN 60034-7 1996-06, B5 for all mounting orientations

Ⓒ
- Flange as per DIN 42948, ed. 11.65
- Position accuracy per concentricity, excentricity and coaxiality to shaft as per DIN 42955 tolerance class N, ed. 12.81

Ⓓ
- Shaft end per DIN 748 part 3, ed. 07.75, IEC 72, ed. 1971, cylindrical
- center drill hole DS M10 per DIN 332 part 2, ed. 05.83 max. screw tightening torque 25,0 Nm
- vibration severity level N per DIN VDE 0530 part 14, ed. 02.93

Options:

1 Output direction

The output direction of the power connector is selected at the time of ordering. Possible directions are:

- to side A
- to side B
- to the right
- to the left

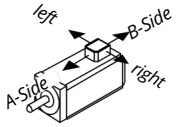

Side B is the output direction illustrated. The dimensions for side A as output direction can be obtained by turning the connector around the X- axis.

2 Motor encoder

- Resolverfeedback (RSF)
- Resolverfeedback (RSF) with integal multiturn absolute encoder

The dimensions are identical.

3 Holding brake:

- without
- with

The dimensions are identical.

4 Output shaft

- plain shaft (preferred type)
- with keyway per DIN 6885 sheet 1, ed. 08.68

(Note! balanced with entire key!)

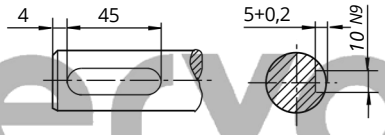

Matching keyway: DIN 6885-A 10 x 8 x 45, not part of delivery.

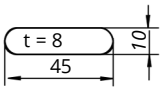

mb_mkd112st480_en.fh7

e-Servo

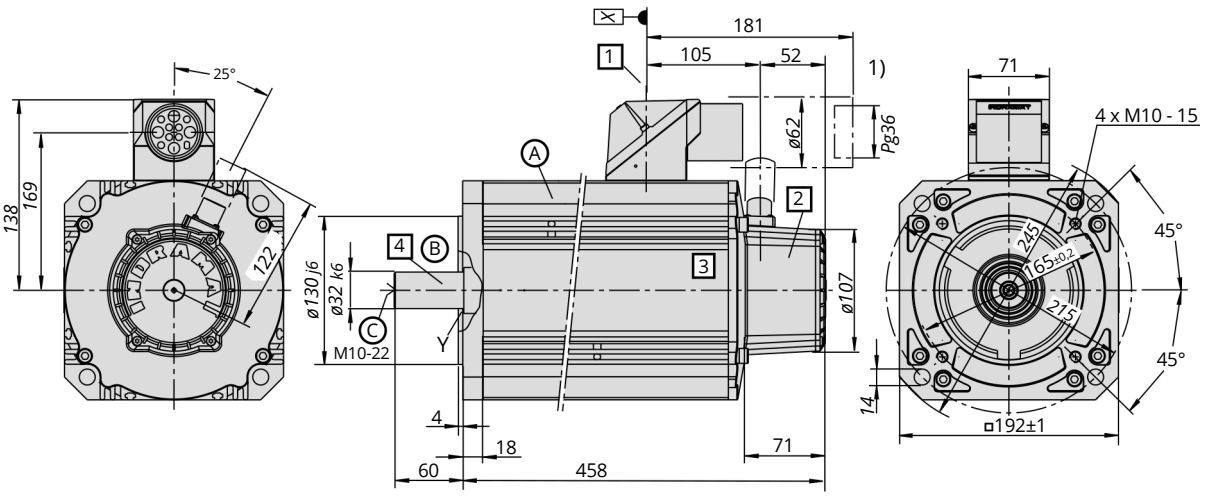

1) connector not included in delivery

Einzelheit Y:

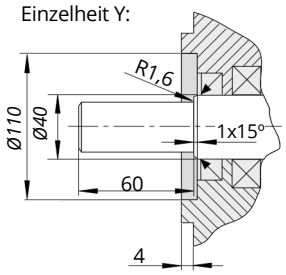

Ⓐ Motor as per DIN EN 60034-7 1996-06, B5 for all mounting orientations

Ⓑ • Flange as per DIN 42948, ed. 11.65
• Position accuracy per concentricity, excentricity and coaxiality to shaft as per DIN 42955 tolerance class N, ed. 12.81

Ⓒ • Shaft end per DIN 748 part 3, ed. 07.75, IEC 72, ed. 1971, cylindrical
• center drill hole DS M10 per DIN 332 part 2, ed. 05.83
max. screw tightening torque 25,0 Nm
• vibration severity level N per DIN VDE 0530 part 14, ed. 02.93

Options:

1 Output direction

The output direction of the power connector is selected at the time of ordering. Possible directions are:

• to side A
• to side B
• to the right
• to the left

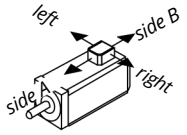

Side B is the output direction illustrated. The dimensions for side A as output direction can be obtained by turning the connector around the X- axis.

2 Motor encoder

• Resolverfeedback (RSF)
• Resolverfeedback (RSF) with integal multiturn absolute encoder
The dimensions are identical.

3 Holding brake:

• without
• with
The dimensions are identical.

4 Output shaft

• plain shaft (preferred type)
• with keyway per DIN 6885 sheet 1, ed. 08.68
(Note! balanced with entire key!)

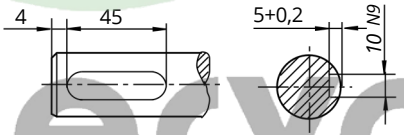

Matching keyway: DIN 6885-A 10 x 8 x 45, not part of delivery.

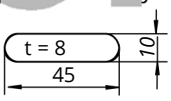

mb_mkd112st380_en.fh7

e-Servo