Table 7-21 1FK7105 CT

Technical data	Code	Unit	–5AF71	
Configuration data				
Rated speed	n_N	RPM	3000	
No. of poles	2p		8	
Rated torque (100 K)	$M_{N\ (100\ K)}$	Nm	26	
Rated current (100 K)	I_N	A	18	
Static torque (60 K)	$M_{0\ (60\ K)}$	Nm	40	
Static torque (100 K)	$M_{0\ (100\ K)}$	Nm	48	
Stall current (60 K)	$I_{0\ (60\ K)}$	A	25	
Stall current (100 K)	$I_{0\ (100\ K)}$	A	31	
Moment of inertia (with brake)	J_{MotBr}	10^{-4} kgm^2	169 156	
Moment of inertia (without brake)	J_{Mot}	10^{-4} kgm^2		
Optimum operating point	n_{opt}	RPM	3000	
	P_{opt}	kW	8.17	
Optimum speed	$n_{max\ mech}$	RPM	5000	
Optimum power	$n_{max\ Inv}$	RPM	5000	
Limiting data	M_{max}	Nm	150 109	
Max. permissible speed (mech.)	I_{max}	A	1.57	
Max. permissible speed (converter)			100	
Max. torque	k_T	Nm/A	0.074	
Max. current	k_E	V/1000 RPM	1.9	
Physical constants	R_{Str}	Ohm	26	
Torque constant	L_D	mH	1.4	
Voltage constant	T_{el}	ms	70	
Winding resistance at 20°C	T_{mech}	ms	125000	
Cyclic inductance	T_{th}	min	41.5	
Electrical time constant	c_t	Nm/rad	39.1	
Mechanical time constant	m_{MotBr}	kg		
Thermal time constant	m_{Mot}	kg	30	
Shaft torsional stiffness			56	
Weight with brake		A	87	
Weight without brake		A		
		Nm		
Recommended motor module 6SL312_-_TE23-0AA_				
Rated current converter	$I_{N\ Inv}$			
Max. current converter	$I_{max\ Inv}$			
Max. torque at $I_{max\ Inv}$	$M_{max\ Inv}$			

e-Servo

For motor		Dimensions in mm (in)											Resolver					
													without brake			with		
Shaft height	Type	DIN IEC	a_1 P	b_1 N	c_1 LA	e_1 M	f AB	f_1 T	g_2 –	h H	i_2 –	s_2 S	k LB	o_1 –	o_2 –	brake ko_1 LB–		o_2 –
1FK7 Compact, type IM B5, natural cooling, with connector, with/without brake																		
80	1FK7080-5		186 (7.32)	130 (5.12)	13 (0.51)	165 (6.50)	155 (6.10)	3.5 (0.14)	119.5 (4.70)	77.5 (3.05)	58 (2.28)	11 (0.43)	156 (6.14)	91 (3.58)	124 (4.88)	184 (7.24)	91 (3.58)	151 (5.94)
	1FK7083-5		186 (7.32)	130 (5.12)	13 (0.51)	165 (6.50)	155 (6.10)	3.5 (0.14)	119.5 (4.70)	77.5 (3.05)	58 (2.28)	11 (0.43)	194 (7.64)	129 (5.08)	162 (6.38)	245 (9.65)	129 (5.08)	207 (8.15)
100	1FK7100-5		240 (9.45)	180 (7.09)	13 (0.51)	215 (8.46)	192 (7.56)	4 (0.16)	138 (5.43)	96 (3.78)	80 (3.15)	14 (0.55)	185 (7.28)	113 (4.45)	153 (6.02)	204 (8.03)	113 (4.45)	172 (6.77)
	1FK7101-5		240 (9.45)	180 (7.09)	13 (0.51)	215 (8.46)	192 (7.56)	4 (0.16)	160 (6.30)	96 (3.78)	80 (3.15)	14 (0.55)	211 (8.31)	139 (5.47)	179 (7.05)	240 (9.45)	139 (5.47)	208 (8.19)
	1FK7103-5		240 (9.45)	180 (7.09)	13 (0.51)	215 (8.46)	192 (7.56)	4 (0.16)	160 (6.30)	96 (3.78)	80 (3.15)	14 (0.55)	237 (9.33)	165 (6.50)	205 (8.07)	266 (10.47)	165 (6.50)	234 (9.21)
	1FK7105-5		240 (9.45)	180 (7.09)	13 (0.51)	215 (8.46)	192 (7.56)	4 (0.16)	160 (6.30)	96 (3.78)	80 (3.15)	14 (0.55)	289 (11.38)	217 (8.54)	257 (10.12)	318 (12.52)	217 (8.54)	286 (11.26)

		Basic absolute encoder (EnDat) (shaft height 48 and larger), Incremental encoder sin/cos 1 V_{pp}						Absolute encoder (EnDat)										
		without brake			with brake			without brake			with							
Shaft height	Type	k LB	o_1 –	o_2 –	k LB	o_1 –	o_2 –	k LB	o_1 –	o_2 –	brake ko_1 LB–		o_2 –	d D	d_6 –	l E	t GA	u F
80	1FK7080-5	179 (7.05)	91 (3.58)	124 (4.88)	206 (8.11)	91 (3.58)	151 (5.94)	187 (7.36)	91 (3.58)	124 (4.88)	215 (8.46)	91 (3.58)	151 (5.94)	32 (1.26)	M12	58 (2.28)	35 (1.38)	10 (0.39)
	1FK7083-5	217 (8.54)	129 (5.08)	162 (6.38)	268 (10.55)	153 (6.02)	213 (8.39)	225 (8.86)	129 (5.08)	162 (6.38)	276 (10.87)	129 (5.08)	207 (8.15)	32 (1.26)	M12	58 (2.28)	35 (1.38)	10 (0.39)
100	1FK7100-5	208 (8.19)	113 (4.45)	153 (6.02)	227 (8.94)	113 (4.45)	172 (6.77)	216 (8.50)	113 (4.45)	153 (6.02)	235 (9.25)	113 (4.45)	172 (6.77)	38 (1.50)	M12	80 (3.15)	41 (1.61)	10 (0.39)
	1FK7101-5	234 (9.21)	139 (5.47)	179 (7.05)	263 (10.35)	139 (5.47)	208 (8.19)	242 (9.53)	139 (5.47)	179 (7.05)	271 (10.67)	139 (5.47)	208 (8.19)	38 (1.50)	M12	80 (3.15)	41 (1.61)	10 (0.39)
	1FK7103-5	260 (10.24)	165 (6.50)	205 (8.07)	289 (11.38)	165 (6.5)	234 (9.21)	268 (10.55)	165 (6.50)	205 (8.07)	297 (11.69)	165 (6.50)	234 (9.21)	38 (1.50)	M12	80 (3.15)	41 (1.61)	10 (0.39)
	1FK7105-5	312 (12.28)	217 (8.54)	257 (10.12)	341 (13.43)	217 (8.54)	286 (11.26)	320 (12.60)	217 (8.54)	257 (10.12)	349 (13.74)	217 (8.54)	286 (11.26)	38 (1.50)	M12	80 (3.15)	41 (1.61)	10 (0.39)

1FK708 . –5

Shaft design with fitted key

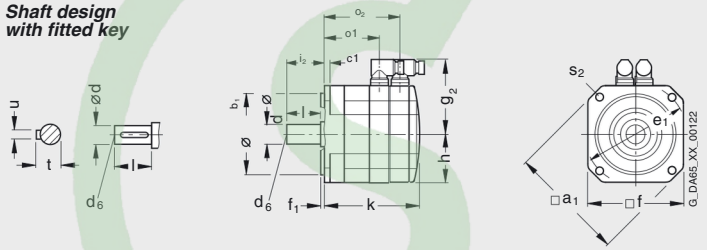

1FK7100–5
1FK7101–5
1FK7103–5
1FK7105–5

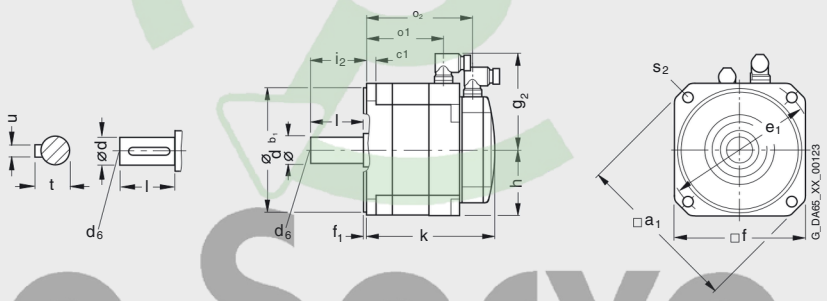

e-Servo